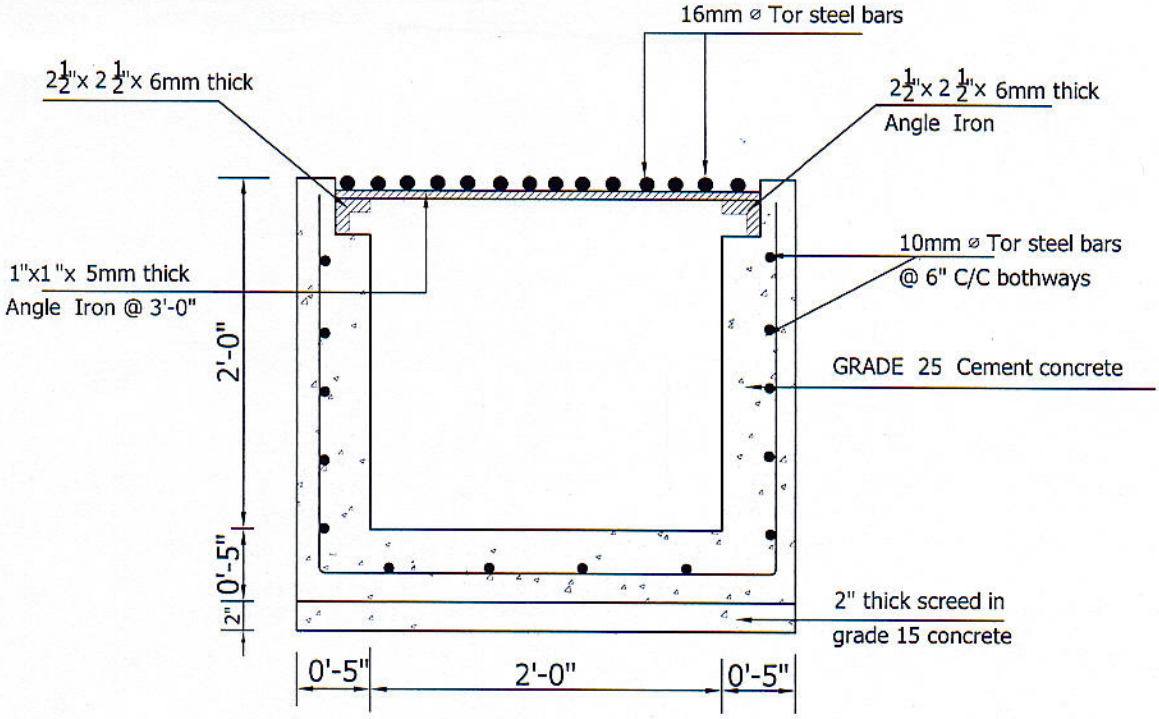

SECTION X-X

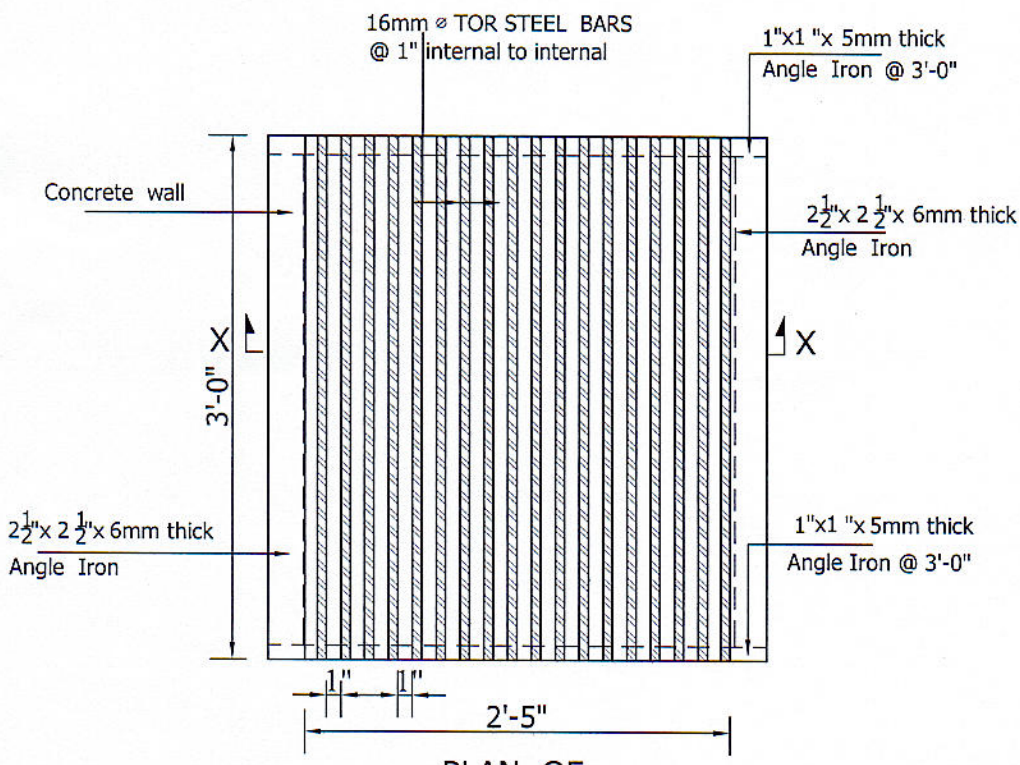

PLAN OF
REMOVABLE GRATING

CONSULTANCY DIVISION ENGINEERING ORGANIZATION. WESTERN PROVINCE PROVINCIAL COUNCIL NO. 204, DENCIL KOBBEKADUWA MAWATHA, BATTARAMULLA.	CAD BY PRADEEPA	DATE 18.09.2020
	CHECKED BY	SCALE 3/8" FEET TO AN INCH
	ENGINEER (W.S. & S.)	DRG. NO. WSS / 2020 /SWD / 11
DETAIL OF SURFACE WATER DRAIN (WITH REMOVABLE GRATING)	DIRECTOR (ENGINEERING)	SHEET NO. 1 OF 1