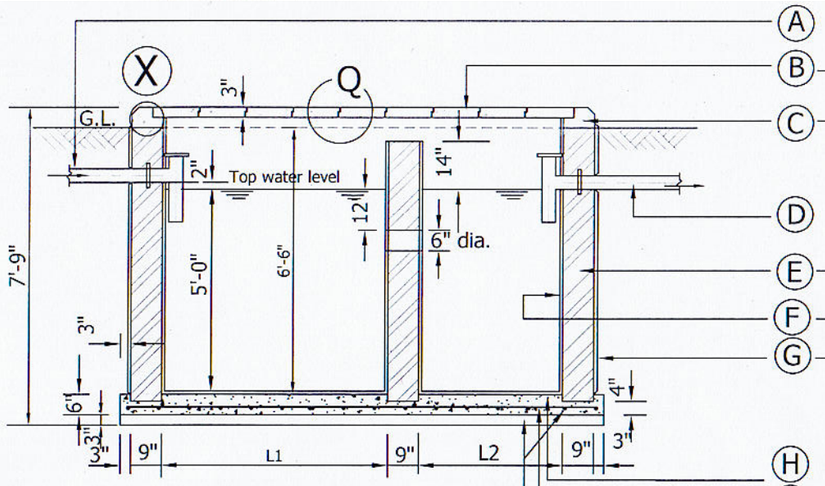

SECTION A-A

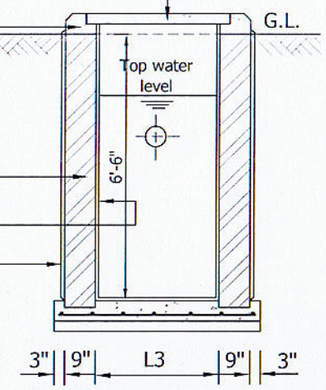

SECTION B-B

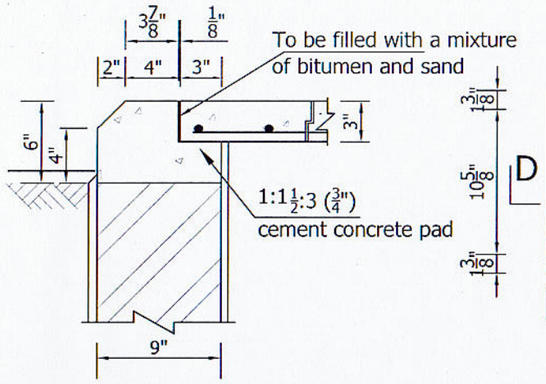

DETAIL AT 'X'

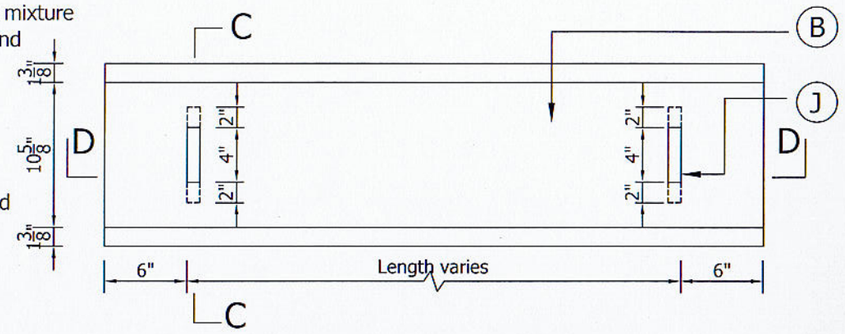

PLAN OF COVER

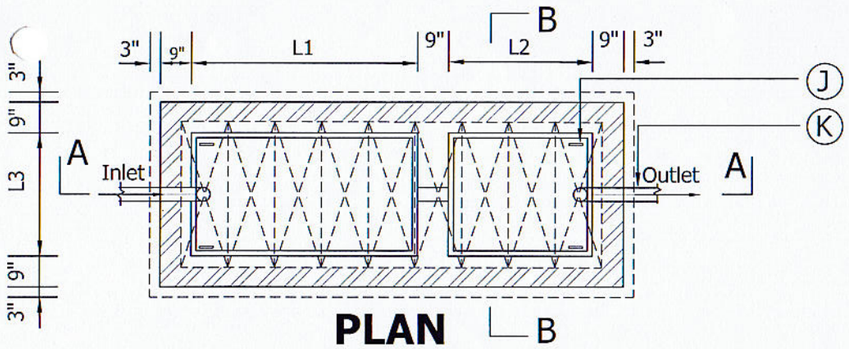

PLAN

DIMENSIONS OF SEPTIC TANKS				
PERSONS	L1+L2	L1	L2	L3
30	7'-0"	4'-6"	2'-6"	3'-0"
40	8'-0"	5'-0"	3'-0"	-DO-
50	9'-0"	5'-6"	3'-6"	-DO-
60	10'-0"	6'-0"	4'-0"	-DO-
70	10'-0"	6'-6"	3'-6"	3'-6"
80	11'-0"	7'-0"	4'-0"	-DO-
90	12'-0"	7'-6"	4'-6"	-DO-
100	13'-0"	8'-6"	4'-6"	-DO-

(A) P.V.C. inlet pipe.

(B) 3" thick cement concrete grade 25 reinforced pre cast. cover slabs.

(C) Cement concrete pad grade 25 as per detail.

(D) Effluent discharge pipe.

(E) 9" brick work in cement mortar 1:5.

(F) Internal walls of the septic tank shall be plastered with 1/2" thick 1:2 mix. and apply approved type of liquid membrane water proofing on surface as per the method statement .Then protective layer of plaster of 1/2" thick to 1:2 mix. trowel smooth with neat grey cement .

(G) External walls of the septic tank shall be plastered with 5/8" thick 1:5 mix.

(H) 6" thick base slab grade 25 no slope to be provided.

(I) 10mmφ bars @ 9" c/c both ways.

(J) 2 nos.cover slabs to be with 12mm⌀ Tor steel lifting handles as per detail. All others without lifting handles.

(K) P.V.C. outlet pipe.

(L) 6mmφ bars @ 12" c/c.

(M) 3 nos. 10mmφ bars.

(N) 3" thick lean concrete 1:3:6 (1").

* Septic tank to be filled with water up to top water level before being put into use.

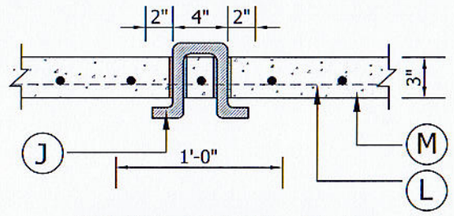

SECTION C-C

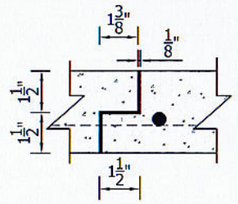

DETAIL AT 'Q'

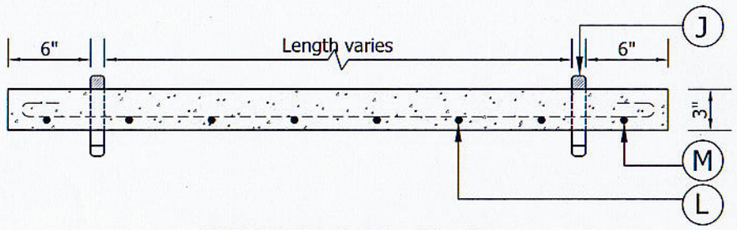

SECTION D-D

CONSULTANCY DIVISION
ENGINEERING ORGANIZATION
WESTERN PROVINCE PROVINCIAL COUNCIL.
204, DENCIL KOBBEKADUWA MAWATHA,
BATTARAMULLA

TYPE PLAN OF SEPTIC TANK FOR 30 TO 100 PERSONS

CAD BY PRADEEPA	DATE 18.08.2020
CHECKED BY	SCALE 4/8" FEET TO AN INCH
ENGINEER (W.S. & S.)	DRG. NO. WSS / 2020 / ST /01
DIRECTOR (ENGINEERING)	SHEET NO. 1 OF 1