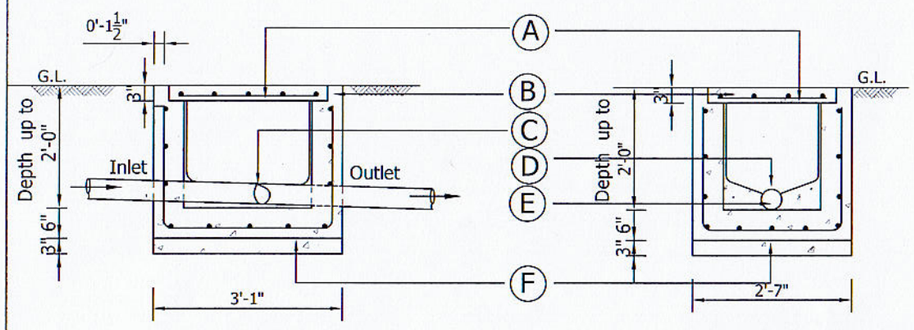

SECTION A-A

SECTION B-B

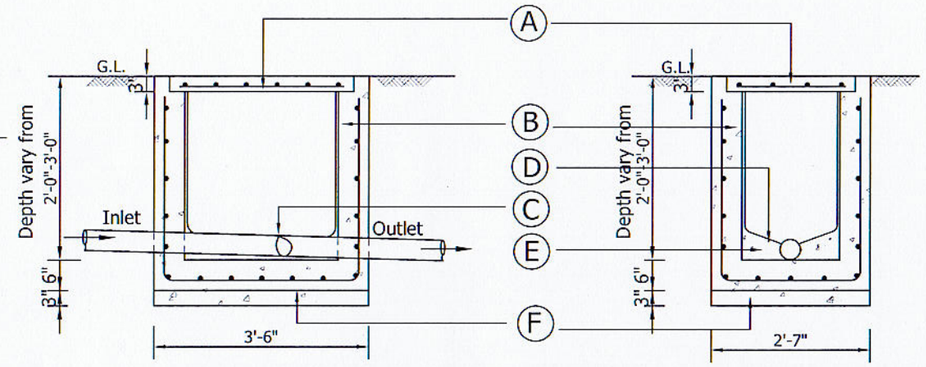

SECTION C-C

SECTION D-D

(A) 3" thick cement concrete grade 20 precast cover slab R/F with 10mmϕ Tor Steel at 6" c/c both ways.

(B) 6" thick Grade 25 RCC walls R/F with 10mm ϕ Tor Steel work 8" c/c both ways.

(C) Minimum height of channel to be the diameter of pipe plus one thickness of the pipe .

(D) Benching 20°

(E) Cement concrete grade 20 with $\frac{5}{8}$" thick plastering in cement sand 1:3.

(F) 3" thick grade 15 lean concrete.

(G) Lifting handle.

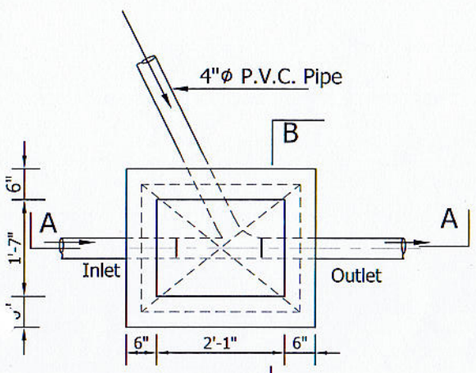

PLAN
(Type 1)
(U-18)

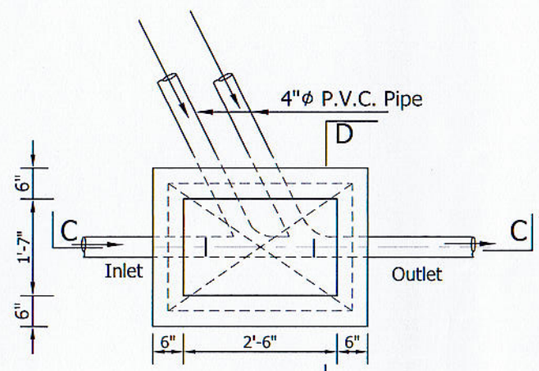

PLAN
(Type 2)
(U-19)

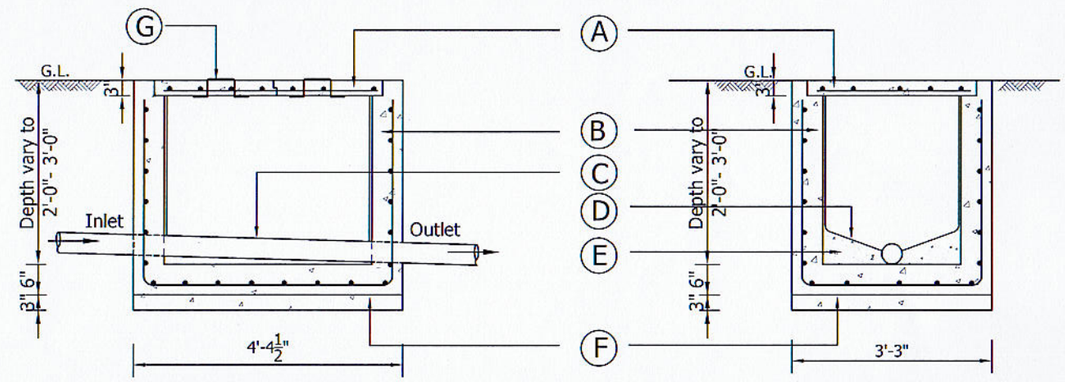

SECTION E-E

SECTION F-F

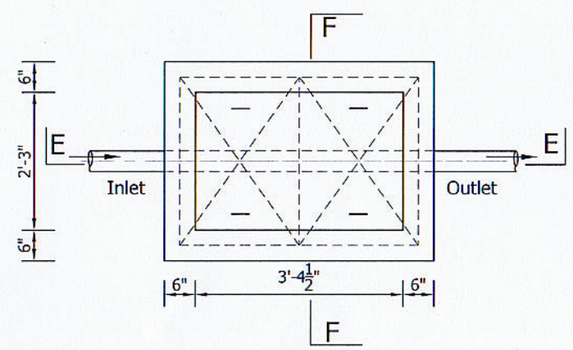

PLAN (U-20)

CONSULTANCY DIVISION ENGINEERING ORGANIZATION WESTERN PROVINCE PROVINCIAL COUNCIL. 204, DENCIL KOBBEKADUWA MAWATHA, BATTARAMULLA	**TYPE PLAN OF SEWER CONCRETE MANHOLES**	CAD BY PRADEEPA	DATE 18.08.2020
		CHECKED BY	SCALE 3/8" FEET TO AN INCH
		ENGINEER (W.S. & S.)	DRG. NO. WSS / 2020 /08
		DIRECTOR (ENGINEERING)	SHEET NO. 08