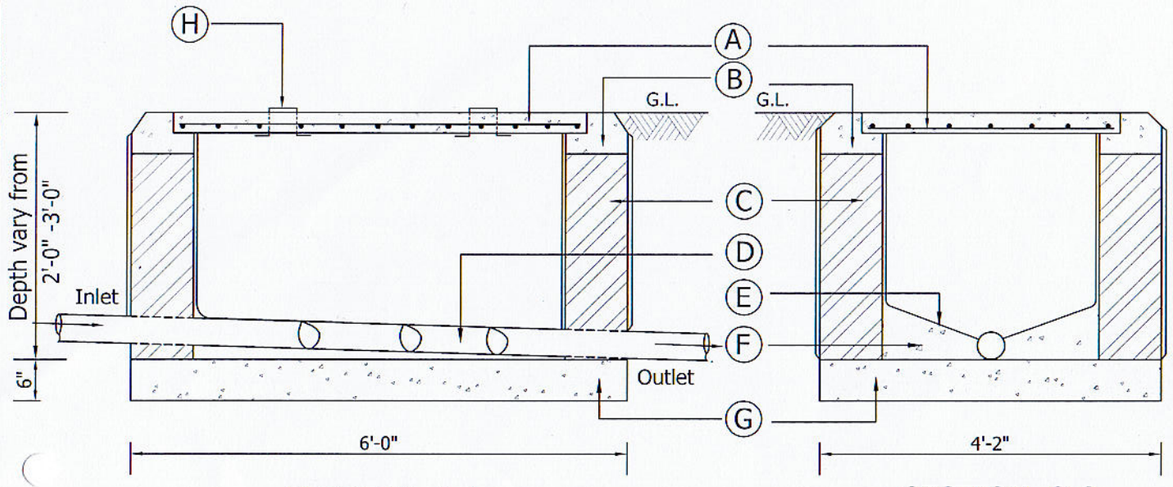

SECTION A-A **SECTION C-C**

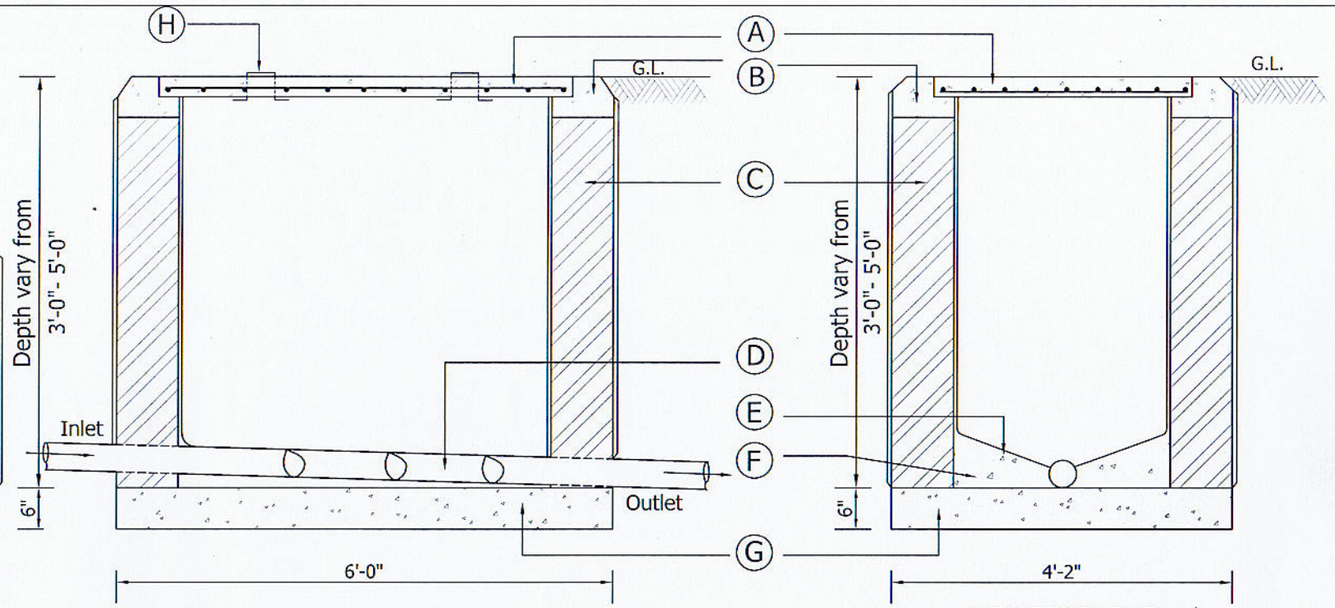

SECTION B-B **SECTION D-D**

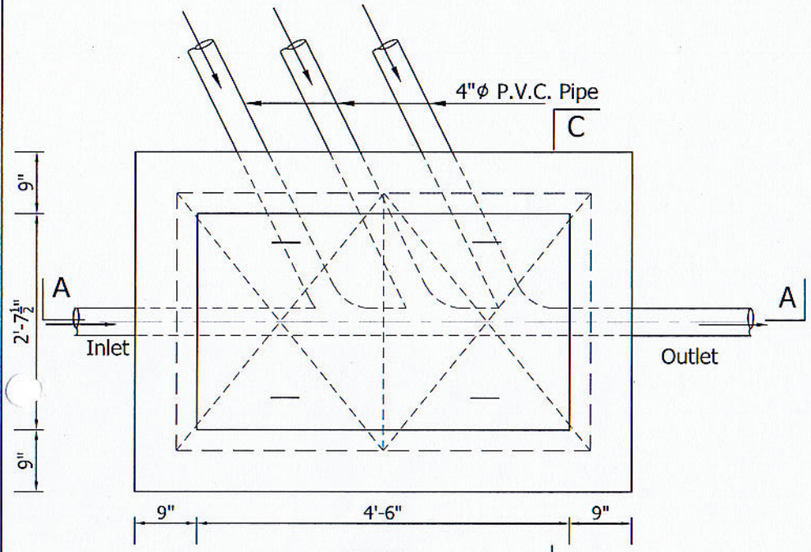

PLAN
(Type 1)
(U-14)

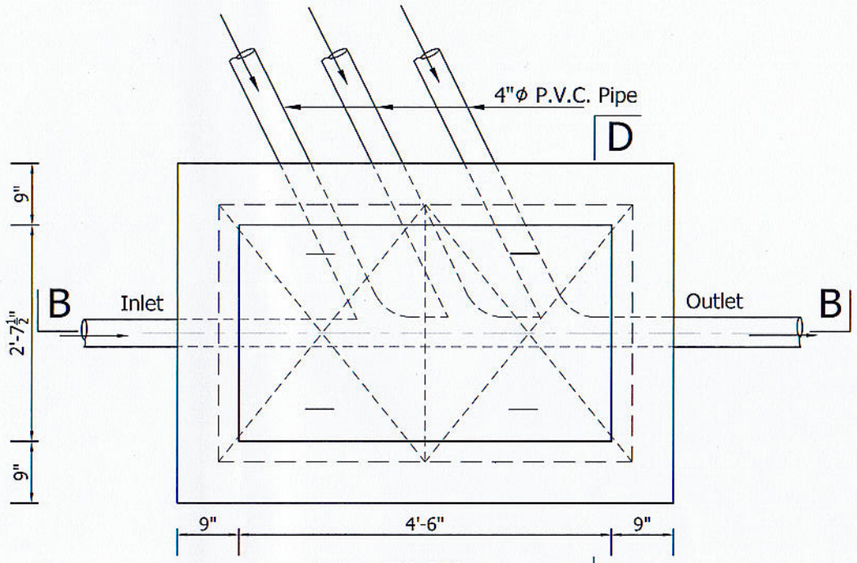

PLAN
(Type 2)
(U-15)

(A) 3" thick cement concrete grade 20 precast cover slab R/F with 10mm ϕ Tor Steel @ 6" c/c both ways.

(B) 6" thick cement concrete pad grade 20.

(C) 9" thick brick masonry in cement mortar 1:3 and ½" thick cement plastering 1:2 finished smooth internal surfaces and external exposed surfaces.

(D) Minimum height of channel to be the diameter of pipe plus one thickness of the pipe.

(E) Benching 20° .

(F) Cement concrete grade 20 with ⅝" thick plastering in cement sand 1:3 .

(G) 6" thick grade 15 base concrete.

(H) Lifting handle.

CONSULTANCY DIVISION ENGINEERING ORGANIZATION WESTERN PROVINCE PROVINCIAL COUNCIL. 204, DENCIL KOBBEKADUWA MAWATHA, BATTARAMULLA	**TYPE PLAN OF SEWER BRICK MANHOLES**	CAD BY PRADEEPA	DATE 18.08.2020
		CHECKED BY	SCALE 4/8" FEET TO AN INCH
		ENGINEER (W.S. & S.)	DRG. NO. WSS / 2020 /05
		DIRECTOR (ENGINEERING)	SHEET NO. 01