PLYWOOD FORMWORK

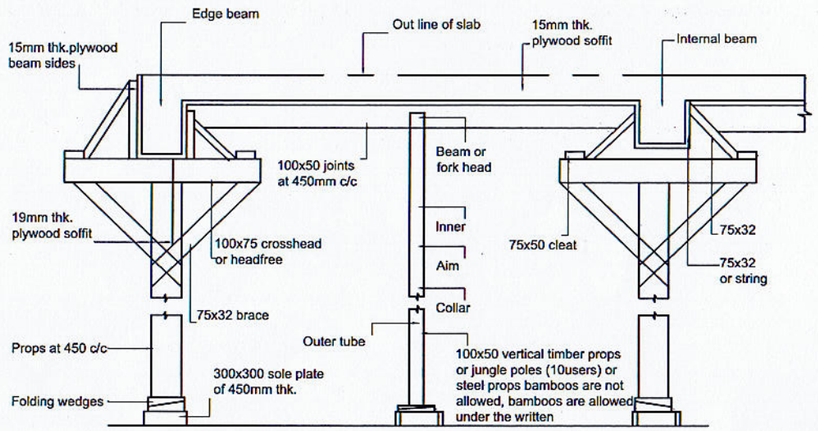

TYPICAL SLAB AND BEAM FORMWORK

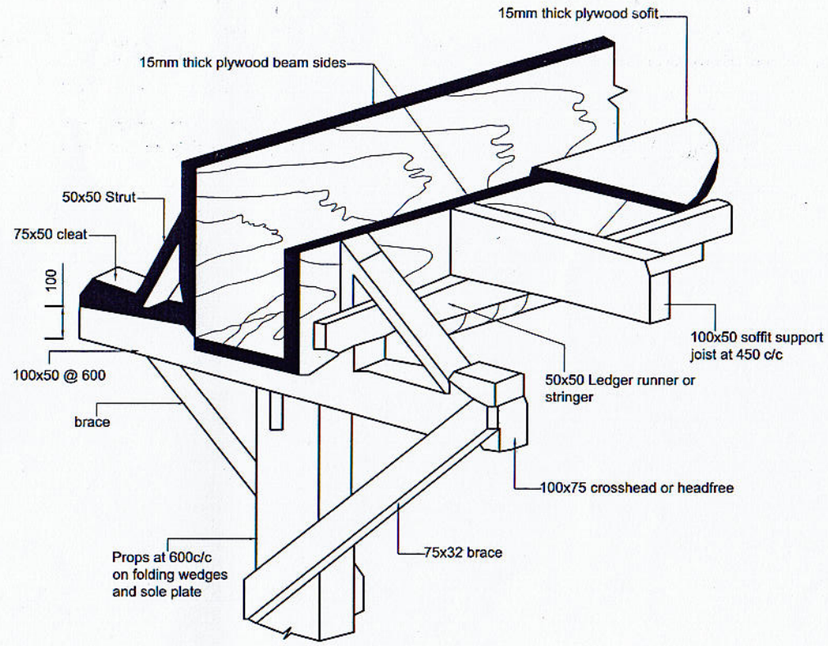

BEAM FORMWORK

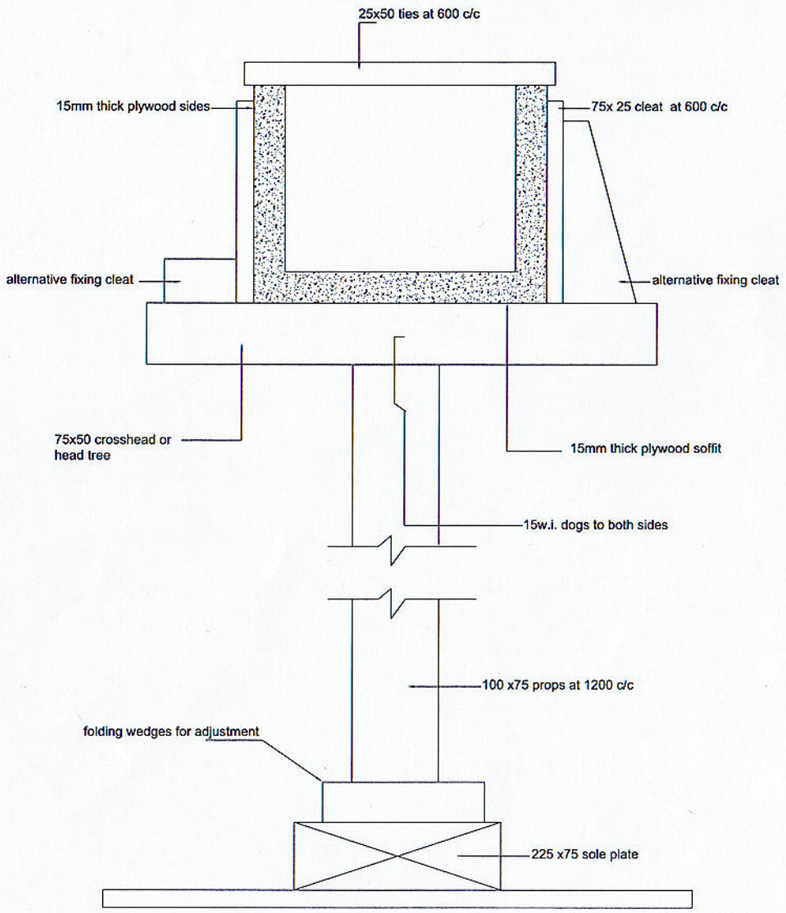

ROOF TIE BEAM OR LINTEL FORMWORK

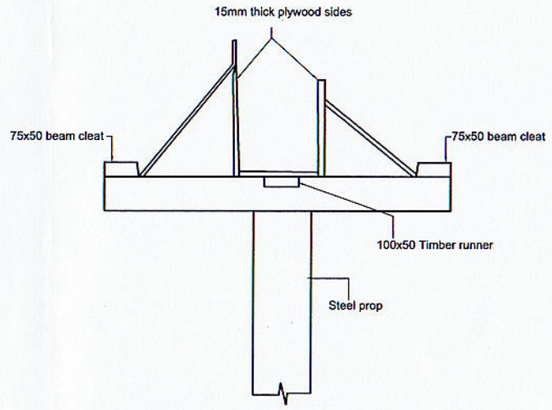

FRONT ELEVATION

REV.NO.	DESCRIPTION	DATE	SIGNATURE

NAME OF THE PROJECT

DRAWING TITLE

FORM WORK

CONNECTED DRAWING NOS.

DE DIVISION :

CONSULTANCY DIVISION
ENGINEERING ORGANIZATION
WESTERN PROVINCIAL COUNCIL
NO.204,
DENZIL KOBBEKADUWA MAWATHA,
BATTARAMULLA.

DESIGNED BY	NAME : SIGNATURE :
CAD BY KALPANI	CHECKED BY
CHIEF ENGINEER (DESIGNS)	DIRECTOR (ENGINEERING)
SCALE - NTS	DATE : 2020.02.18
DRG. NO. ST/TYPE PLAN/ SLAB/BEAM/2020/DETAIL/02&03 ST/TYPE PLAN/ SLAB/BEAM/2020/DETAIL/01	SHEET NO : 01 OF 01