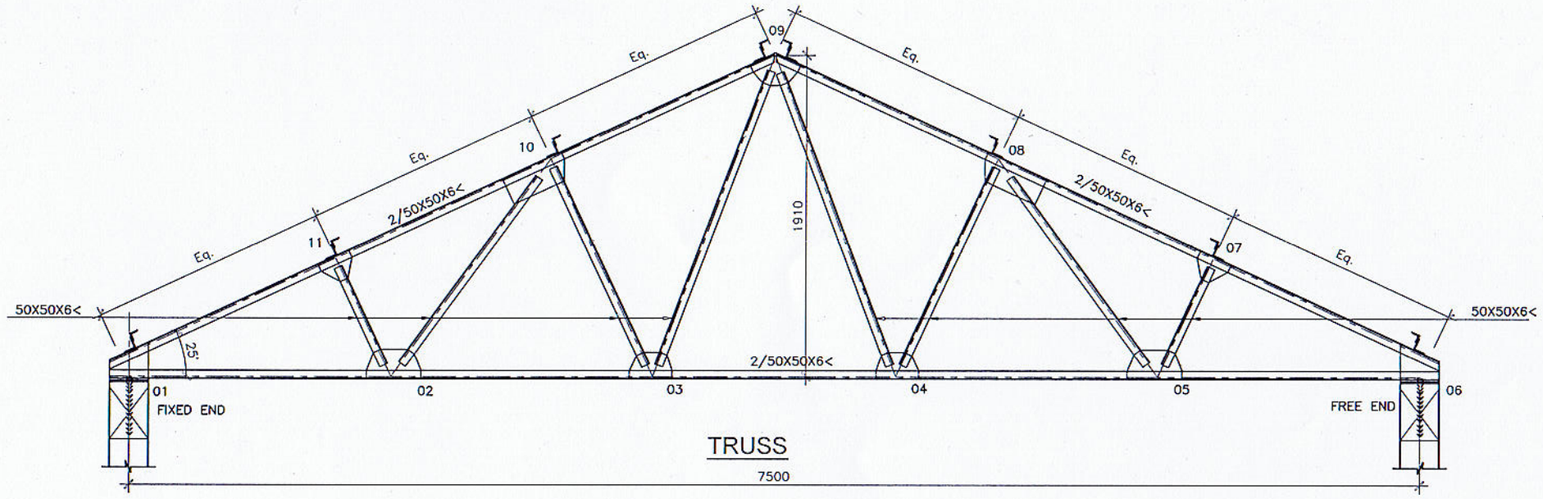

TRUSS

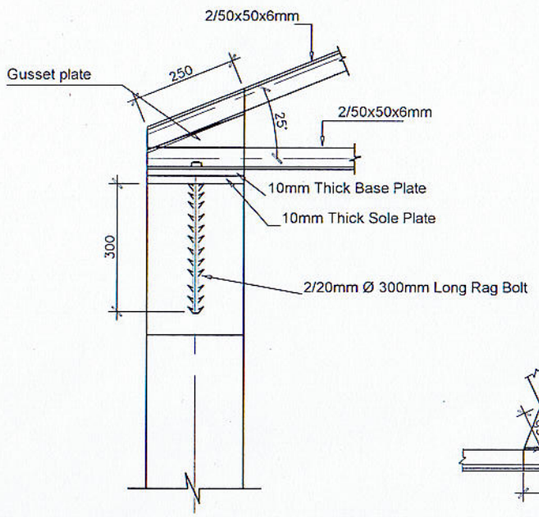

FIXED END OF TRUSS

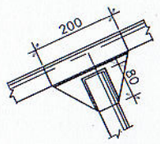

NODE 11

(node 07 similar to mirror image of node 11)

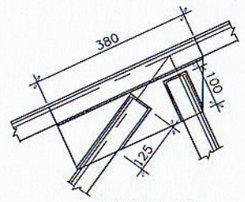

NODE 10

(node 08 similar to mirror image of node 10)

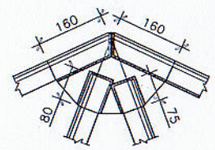

NODE 09

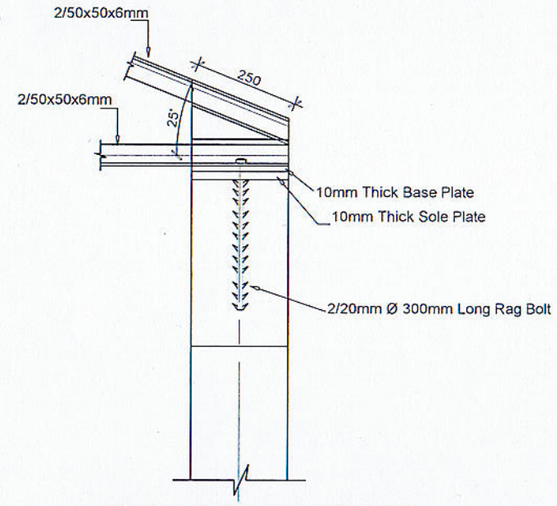

FREE END OF TRUSS

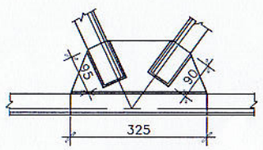

NODE 02

(node 05 similar to mirror image of node 02)

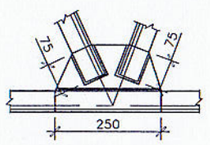

NODE 03

(node 04 similar to mirror image of node 03)

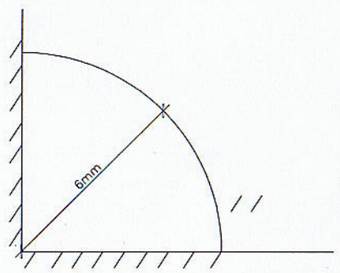

TYPICAL WELD DETAIL

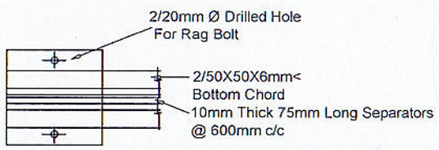

FIXED END OF TRUSS (PLAN)

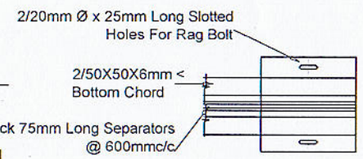

FREE END OF TRUSS (PLAN)

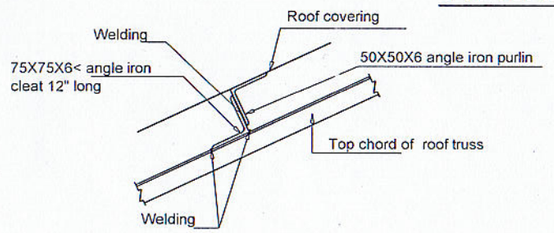

FIXING DETAIL OF PURLIN TO ROOF TRUSS

NOTES:-

1. Pitch of the roof (maximum. 25°,minimum.18°)
2. All welding to be 6mm thickness.
3. All gusset plate to be 10mm. thickness.
4. All double angle members of trusses should be seperated by welding 10mm thick 75mm long seperators in 600mm c/c maximum.
5. All steel work in roof should be of grade 43 steel with yield strength - 275n/mm² ultimate tensile stress -430 n/mm²
6. After fabrication & fixing of roof trusses, they should have been thoroughly applied with two coats of zink phosphate paint.
7. Angle iron purlin to be 50x50x6mm thick
8. Maximum Truss Spacing 10'-0"
9. Purlin Cleat to be 75 x75x6mm thick and 12" long
10. For Estimation Timber frame work should be added.
11. For 13 ½"x13 ½" columns,Truss Should Be Placed on 300mm High 1:2:4(¾") concrete Pad.

NAME OF THE PROJECT

LAYOUT & DETAILS OF STEEL ROOF TRUSS
SPAN 7500mm(25'-0")
(TYPE PLAN)

DRAWING TITLE

STEEL ROOF TRUSS FOR CALICUT TILE ROOFING 7500mm(25'-0")
BSR NO: Y12 & Y27

CONNECTED DRAWING NOS.

CONSULTANCY DIVISION
ENGINEERING ORGANIZATION
WESTERN PROVINCIAL COUNCIL
NO: 204
DENZIL KOBBEKADUWA MAWATHA
BATTARAMULLA

DESIGNED BY	NAME :- L. D. GALABADA	
	SIGNATURE	
CAD BY :NAVEEN		CHECKED BY
CHIEF ENGINEER (DESIGNS)		DIRECTOR (ENGINEERING)
SCALE -		DATE - 11/10/2021
DRG. NO. ST/TYPE PLAN/ROOF TRUSS/2020/DETAIL-03		SHEET NO. 03