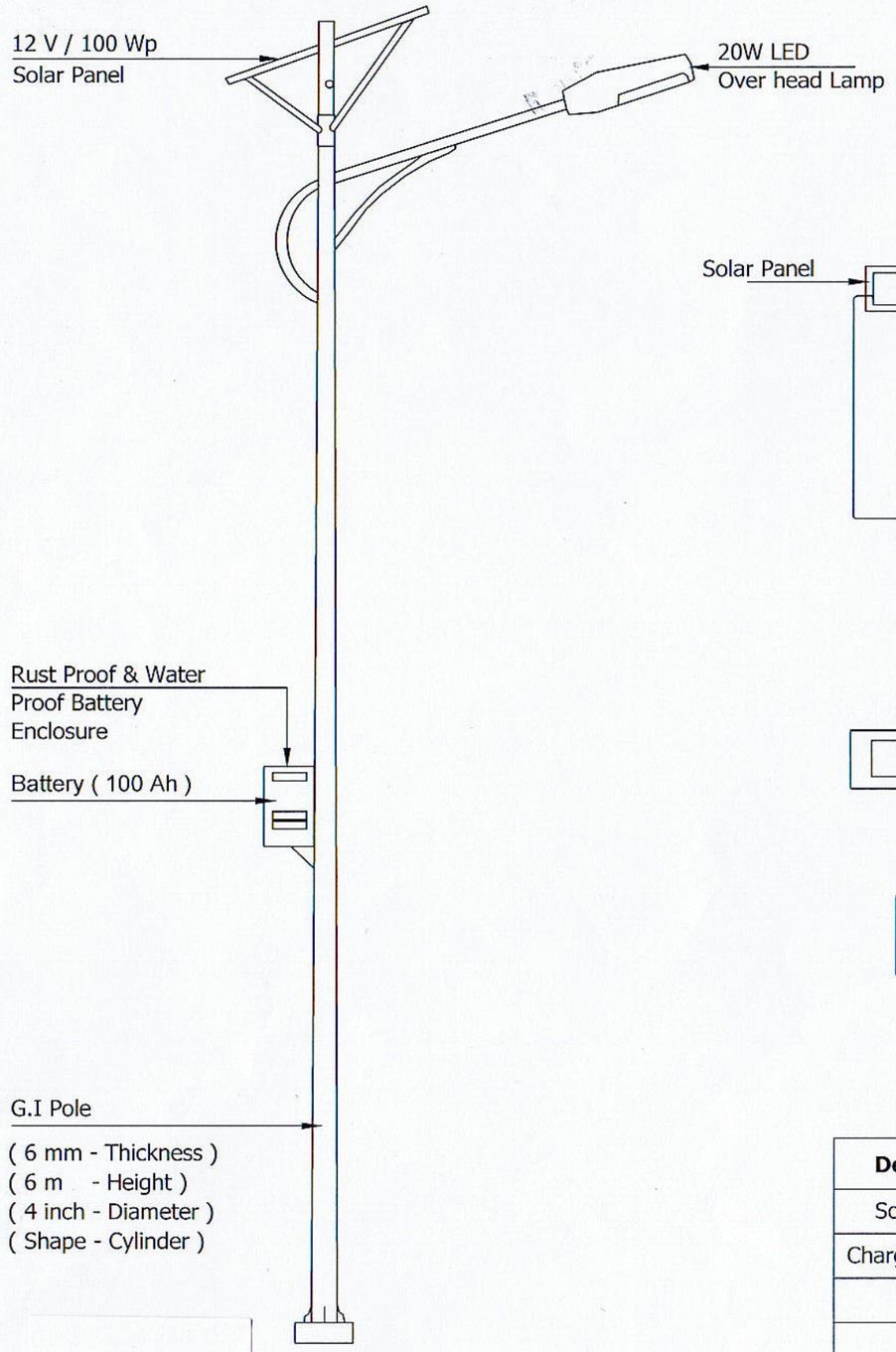


**LAMP POST**

( V - 224 )

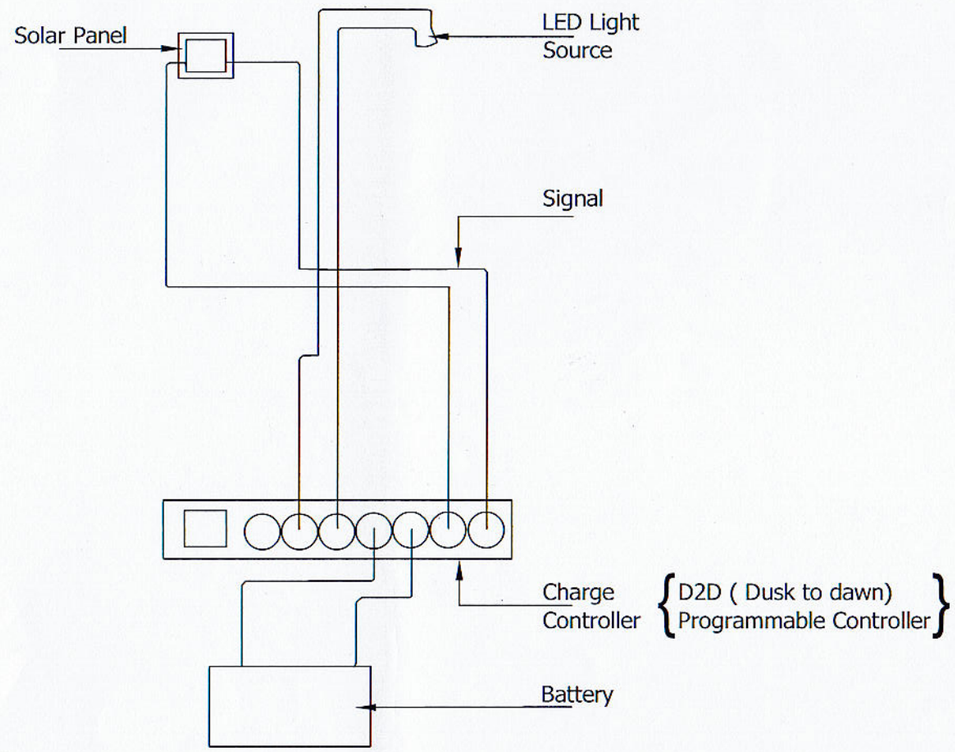


**CIRCUIT DIAGRAM**

| Description | Make | ENAA | ENBB | Warranty |
|---|---|---|---|---|
| Solar Module | Enricher - China | 100Wp | 100Wp | 25 Years |
| Charger Controller | EP SOLAR - China | 10AMP | 10AMP | 2 Years |
| Battery | Epic / Lucas | 100Ah | 100Ah | 2 Years |
| Lamp | TRITECH - China | 20W | 100W x 2 | 2 Years |
| Lamp Post | GI | 2.5 inch | 2.5 inch | 10 Years |

| REV. NO. | DESCRIPTION | DATE | SIGNATURE |
|---|---|---|---|

NAME OF THE PROJECT :

**PROPOSED DETAIL DRAWINGS**

DRAWING TITLE :

DETAIL OF SINGLE ARM SOLAR STREET LAMP

CONNECTED DRAWING NOS.

CONSULTANCY DIVISION ENGINEERING ORGANIZATION.
WESTERN PROVINCE PROVINCIAL COUNCIL
204, DENCIL KOBBEKADUWA MAWTHA
BATTARAMULLA

DESIGNED BY — NAME: S.A.D.A.P.SAMARATHUNGA — SIGNATURE

CAD BY : UDARI

CHECKED BY :

ELECTRICAL ENGINEER

DIRECTOR (ENGINEERING)

SCALE : 2 FEET TO AN INCH

DATE : 2020.07.10

DRG.NO. : ELEC/ST/01

SHEET NO. : 01