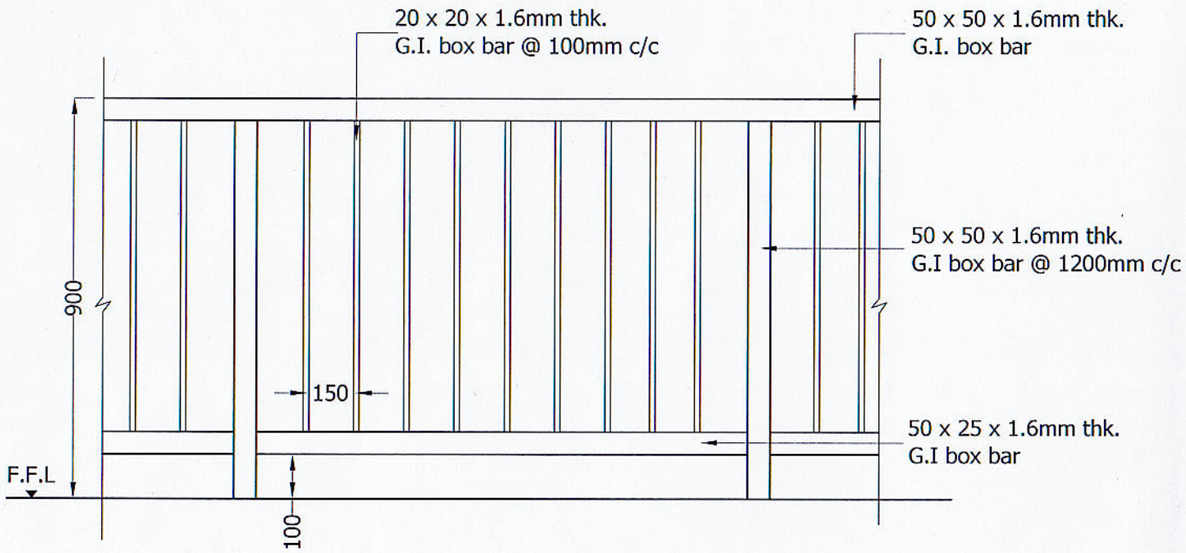

BALCONY HAND RAIL DETAIL

(Type - 2)

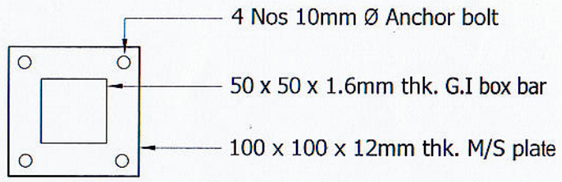

DETAIL AT 'A'

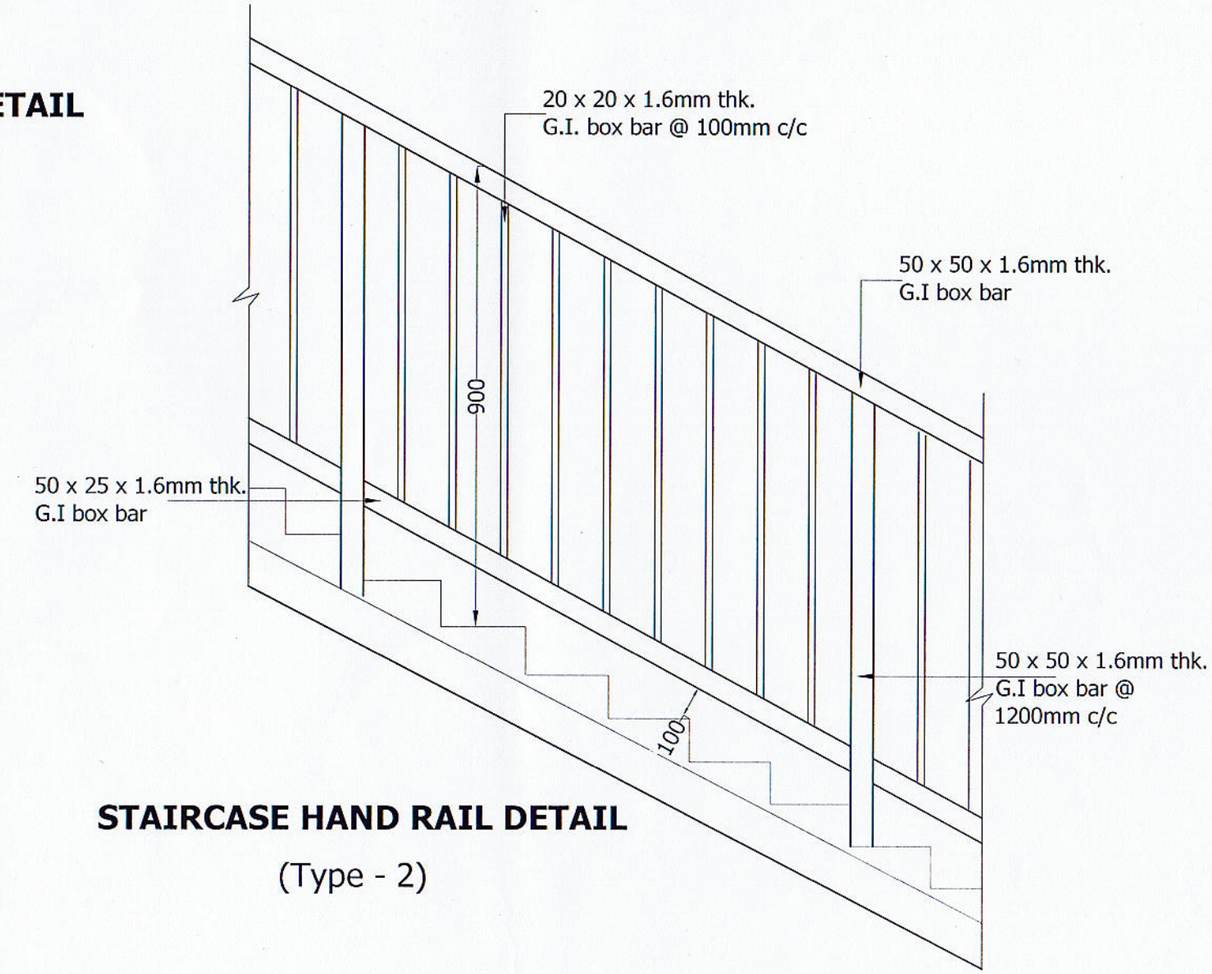

STAIRCASE HAND RAIL DETAIL

(Type - 2)

REV. NO.	DESCRIPTION	DATE	SIGNATURE

NAME OF THE PROJECT :

TYPE PLAN OF BALCONY HANDRAIL DETAIL & STAIR CASE HANDRAIL DETAIL (TYPE - 2)

DRAWING TITLE : HANDRAIL DETAILS

CONNECTED DRAWING NOS.

CONSULTANCY DIVISION ENGINEERING ORGANIZATION.
WESTERN PROVINCE PROVINCIAL COUNCIL
204, DENCIL KOBBEKADUWA MAWTHA
BATTARAMULLA

DESIGNED BY	NAME	
	SIGNATURE	
CAD BY : *BHAGYA*	CHECKED BY :	
ARCHITECT	DIRECTOR (ENGINEERING)	
SCALE : 1:25	DATE : 2020.07.15	
DRG.NO. : AR/TYPE PLAN/HANDRAIL/ 2020/DETAIL 02	SHEET NO. : 02	