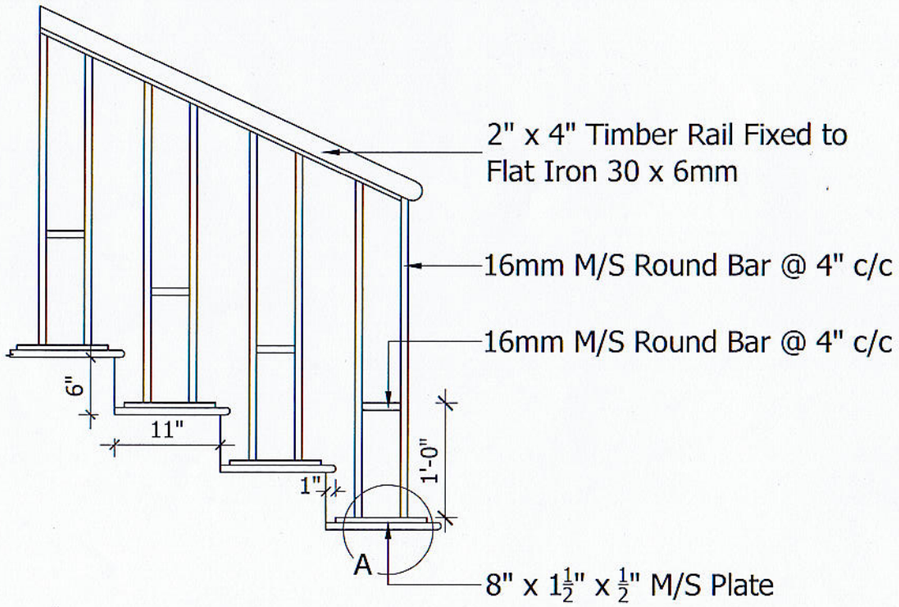

STAIR CASE HANDRAIL DETAIL

TYPE - 1

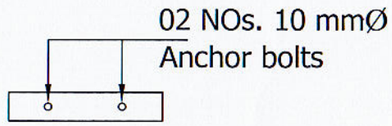

DETAIL AT 'A'

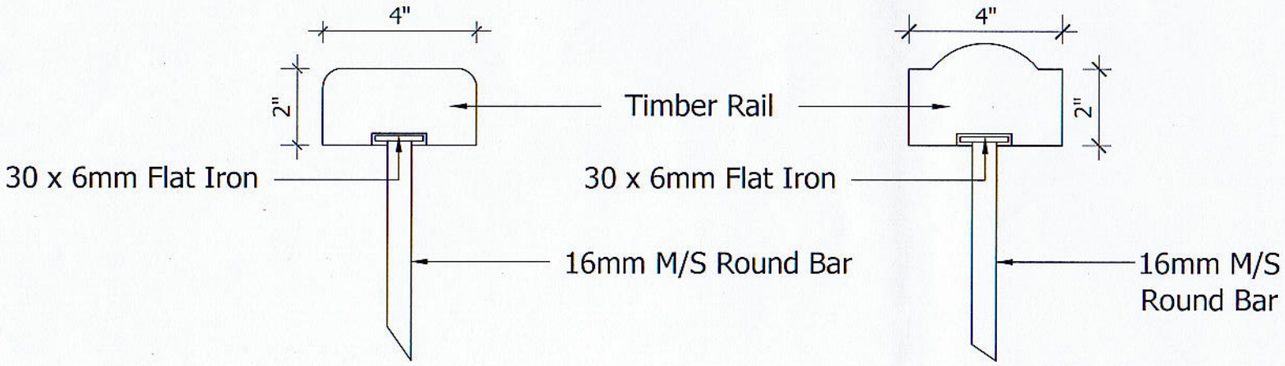

TYPE 1-A **TYPE 1-B**

REV. NO.	DESCRIPTION	DATE	SIGNATURE

NAME OF THE PROJECT :

PROPOSED DETAIL DRAWINGS

DRAWING TITLE : HAND RAIL DETAILS

CONNECTED DRAWING NOS.

CONSULTANCY DIVISION ENGINEERING ORGANIZATION.
WESTERN PROVINCE PROVINCIAL COUNCIL
204, DENCIL KOBBEKADUWA MAWTHA
BATTARAMULLA

DESIGNED BY	NAME	
	SIGNATURE	
CAD BY : *DEEPTHI UDARI*	CHECKED BY :	
ARCHITECT	DIRECTOR (ENGINEERING)	
SCALE : 2 FEET TO AN INCH	DATE : 2020.07.10	
DRG.NO. : AR/DETAIL DRG/2010/01/10	SHEET NO. : 02	